HYPRO®

# ROLLER PUMPS

Form L-0100R
05/11, Rev. C

## Installation, Operation, Repair and Parts Manual

## Description

Hypro roller pumps are designed for agricultural and industrial spraying and transfer of a variety fluids. These include insecticides, herbicides, emulsives, aromatic solvents, liquid fertilizers and many other liquids. The economical rotary-action roller principle requires no check valves while providing positive displacement characteristics with less friction and lower starting torque than other pumps. Construction features include a cast-iron, Ni-Resist or the new SilverCast™ body, 416 stainless steel shaft, sealed factory-lubricated ball bearings, cartridge-type lip seals of Viton, Buna-N, and versatile Super Rollers. (Super Rollers feature the life of nylon and the chemical resistance of polypropylene.) Rotation for all models is counterclockwise for easy tractor PTO drive, **except models 4001 and 4101 which are clockwise**. Pumps are available in reverse rotation.

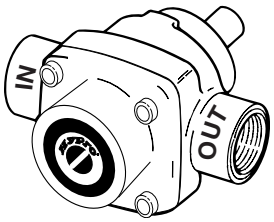


### SERIES 4001 & 4101

4-ROLLER PUMP

Max. Flow Rate: .....9 gpm (4001)
7 gpm (4101)
Max. Pressure: .....150 psi
Max. RPM:.....1800 rpm (4001)
2600 rpm (4101)
Ports: .....3/4" NPT Inlet & Outlet
Shaft:.....5/8" Dia. (Solid)
1/2" Dia. (Hollow)
Continuous Operation.....100 psi
Intermittent Operation.....150 psi

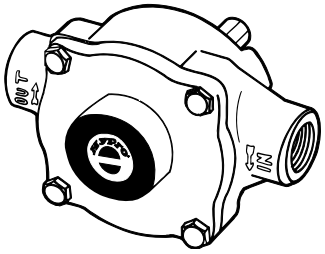


### SERIES 6500

6-ROLLER PUMP

Max. Flow Rate: .....22 gpm
Max. Pressure: .....300 psi
Max. RPM: .....1200 rpm
Ports: .....3/4" NPT Inlet & Outlet
.....1" Hose Barb Included
Shaft:.....5/8" Dia. (Solid)
Continuous Operation.....100 psi
Intermittent Operation.....300 psi

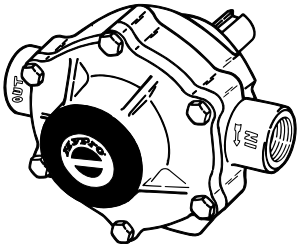


### SERIES 7560

8-ROLLER PUMP

Max. Flow Rate: .....22 gpm
Max. Pressure: .....300 psi
Max. RPM: .....1000 rpm
Ports: .....3/4" NPT Inlet & Outlet
.....1" Hose Barb Included
Shaft:.....15/16" Dia. (Solid)
Continuous Operation.....100 psi
Intermittent Operation.....300 psi

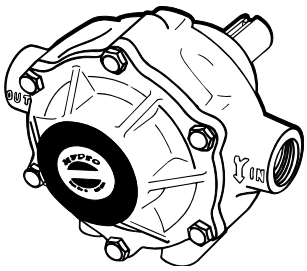


### SERIES 7700

7-ROLLER PUMP

Max. Flow Rate: .....22.4 gpm
Max.Pressure: .....200 psi
Max. RPM: .....800 rpm
Ports: .....3/4" NPT Inlet & Outlet
.....1" Hose Barb Included
Shaft:.....15/16" Dia. (Solid)
Continuous Operation.....100 psi
Intermittent Operation.....200 psi

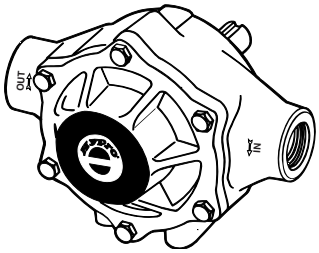


### SERIES 1700

5-ROLLER PUMP

Max. Flow Rate: .....45 gpm
Max. Pressure: ..... 200 psi
Max. RPM: .....1000 rpm
Ports:.....1" NPT Inlet & Outlet
.....1-1/4" Hose Barb Included
Shaft:.....15/16" Dia. (Solid)
Continuous Operation.....100 psi
Intermittent Operation.....200 psi

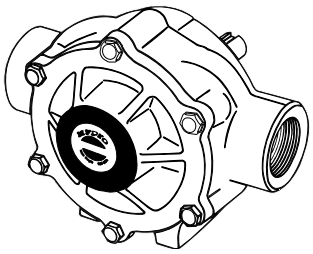

### SERIES 1500

6-ROLLER PUMP

Max. Flow Rate: .....62 gpm
Max. Pressure: .....150 psi
Max. RPM: .....1000 rpm
Ports: ....1-1/2" NPT Inlet & Outlet
Shaft:.....15/16" Dia. (Solid)
Continuous Operation.....100 psi
Intermittent Operation.....150 psi

## General Safety Information

1. **Use a pressure relief device on the discharge side of the pump to prevent damage from pressure buildup when the pump discharge is blocked or otherwise closed and the power source is still running.**
2. **WARNING: Never pump flammable or explosive fluids such as gasoline, fuel oil, kerosene, etc. Never use in explosive atmospheres. The pump should be used only with liquids compatible with the pump component materials. Failure to follow this warning can result in personal injury and/or property damage and will void the product warranty.**
3. **Never pump acids (i.e. acid fertilizer) with Super Rollers!** When pumping acidic fertilizer, Hypro recommends only the Silver Series castings and Teflon rollers, or use one of Hypro's poly centrifugal pumps.
4. Never run the pump faster than maximum recommended speed.
5. Never pump at pressures higher than the maximum recommended pressure.
6. Never pump liquids at temperatures higher than the recommended maximum temperatures (140°F/60°C).
7. Make certain that the power source conforms to the requirements of your equipment.
8. Provide adequate protection in guarding around the moving parts such as the shaft and pulleys.
9. Disconnect power before servicing.
10. Release all pressure within the system before servicing any component.
11. Drain all liquids from the system before servicing any component.
12. Check all hoses for weak or worn condition before each use. Make certain that all connections are tight and secure.
13. Periodically inspect the pump and the system components. Perform routine maintenance as required (see Maintenance section).
14. Never operate a gasoline engine in an enclosed area. Be sure the area is well ventilated.
15. Use only pipe, hose and fittings rated for the maximum psi rating of the pump.
16. Never use these pumps for pumping water or other liquids for human or animal consumption.

## Drive Source Installation

This manual will cover the installation of the basic drive configurations available for Hypro roller pumps. Consult the recommendations of the manufacturer of your motor or engine for additional information. Read all safety information before attempting to install or operate the pump.

## Tractor PTO Installation

The preferred method for mounting the torque arm (**3430-0540**) and pump to a tractor is with the chains going up to provide support for the pump (see Figure A). Attach the torque arm to the pump with the long side of the arm on the inlet side of the pump for this type of mounting. Many tractors do not have easy attachment points for securing the tension and torque chains. It may be necessary to drill holes in the tractor's master shield to attach the chains.

It is also acceptable to mount an angle iron on the master shield to attach the chains. The chains should be attached to the tractor as close to vertical as possible to avoid a bending force on the pump.

1. Mount the pump and torque arm to the PTO shaft using a Hypro series 1320, 1321 or 1323 coupler.
2. Attach the torque chain to the tractor frame with arm in horizontal position.
3. Attach the tensioning chain to the tractor frame while applying tension to the spring.

It is permissible to mount the torque arm with the chain in the down position. To do this, mount the arm to the pump in the reverse position. Do not use the tension spring or chain.

**WARNING: Do not attach torque arm to movable linkages.**

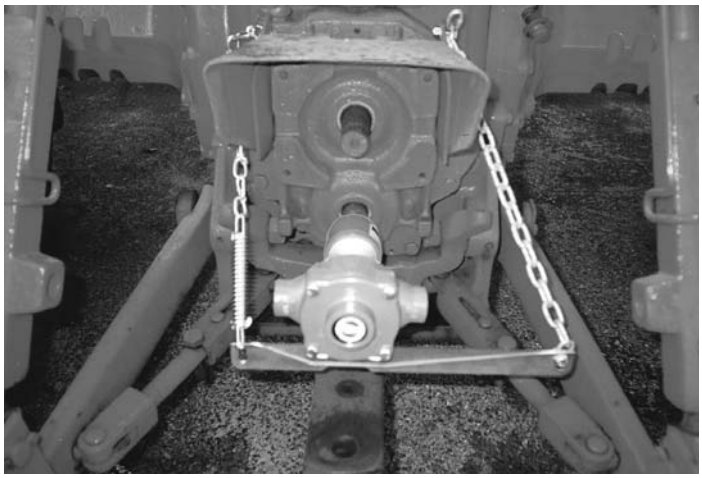

**Figure A**

# Belt/Pulley Drive Installation

Belt and pulley drive systems are typically used to reduce pump speed. For determining proper pulley sizes, use the formula below as a guideline and use “A” or “B” section belts.

$$\frac{\text{MOTOR RPM}}{\text{PUMP RPM}} = \frac{\text{FLOW (@ RATED SPEED)}}{\text{FLOW (DESIRED)}} = \frac{\text{PUMP PULLEY DIA.}}{\text{MOTOR PULLEY DIA.}}$$

**EXAMPLE**: Use a 1725 RPM electric motor to drive a pump at 950 RPM.

Typically, a pulley diameter on the motor is 3.4 inches. The pump pulley diameter can be determined from the formula above:

$$\frac{1725}{950} \quad \frac{\text{PUMP PULLEY DIAMETER}}{3.4 \text{ INCHES}}$$

$$\frac{1725}{950} \text{ X } 3.4 \text{ INCHES} = 6.2 \text{ INCHES}$$

1. Install pulley or bushing/sheave combination (See Figure 1) onto pump and motor shaft. Mount pump next to the motor making sure pulleys are lined up properly. (See Figure 2 for proper pump and motor orientation.) Use a straight edge as shown. Rotate to check for run-out and bent shafts.
2. Make sure belts have proper tension - belts too tight will cause bearing wear and belts too loose will cause slipping (See Figure 3).
3. The rotation on the 4000 series roller pump is gas engine rotation, opposite from the standard roller pump.

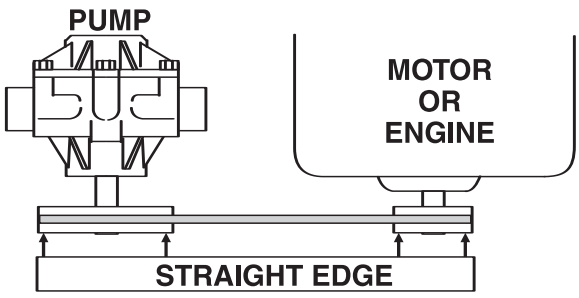


**Figure 1**

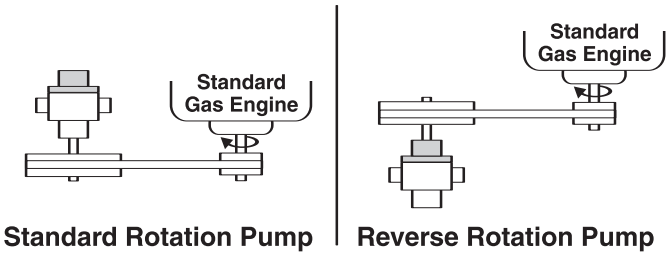


**Figure 2**

Push the belt midway between the pulleys, check the deflection (d) and adjust:
**d = 0.016 x L**

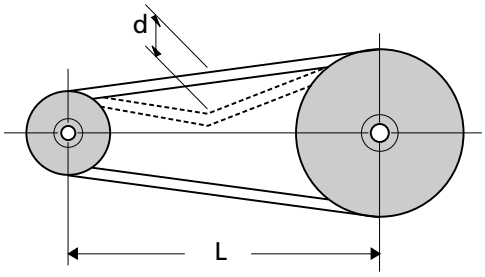


**Figure 3**

## Direct Drive — Flexible Coupling

When direct driving Hypro roller pumps with flexible couplings, make sure that the speed (rpm) of the gas engine or electric motor is within the maximum rated rpm of your pump. Also make sure that shaft rotation is correct between the pump and the motor or gas engine (See Figure 4).

1. Mount motor or engine into position on base.
2. Line up pump shaft with straight edge as shown in Figure 4 to assure they are aligned. Shim pump, if necessary, to match shaft height of engine or motor. Shaft ends should not touch.
3. Mark exact position of pump on base - remove and install coupling halves on both shafts. Place coupling center disc into one of the coupling halves.
4. Reposition pump, sliding coupling halves together.

**NOTE: No end thrust should be applied to pump when coupling is connected.**

5. Tighten pump mounting; then tighten the set screws on each coupling.

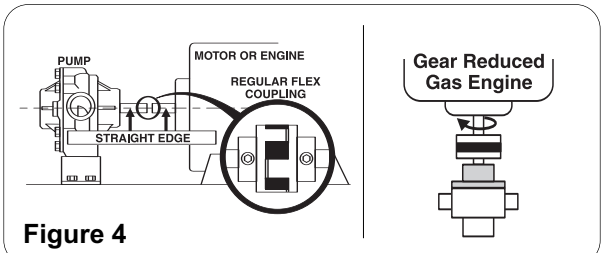


**Figure 4**

## System Installation

**NOTE: Use only pipe, fittings, accessories, hose, etc. rated for the maximum pressure rating of the pump.**

1. Select adequate size drive unit to avoid overloading. Avoid unnecessary restrictions in the line such as elbows, check valves, and all extraneous curves and bends.
2. Avoid using looped sections of tubing or pipe which might permit air to become trapped.
3. Use pipe joint sealant on pipe threads to assure watertight connections.
4. Selection of the right type and size of hose is vital to good performance. Be sure to hook up the lines to the proper ports on the pump.
5. **Always use a good quality suction hose (one or two braid reinforced hose to prevent collapse) of at least the same diameter as the inlet port of the pump. If the suction (inlet) hose is more than four feet long, then use the next larger size.**
6. A strainer should be installed in the suction line. Clean the strainer as soon as it becomes clogged.
7. **Never attach an agitator or any restriction to a bypass line of a pressure relief device because system damage may occur.**

**Figure 5**
Typical System Installation

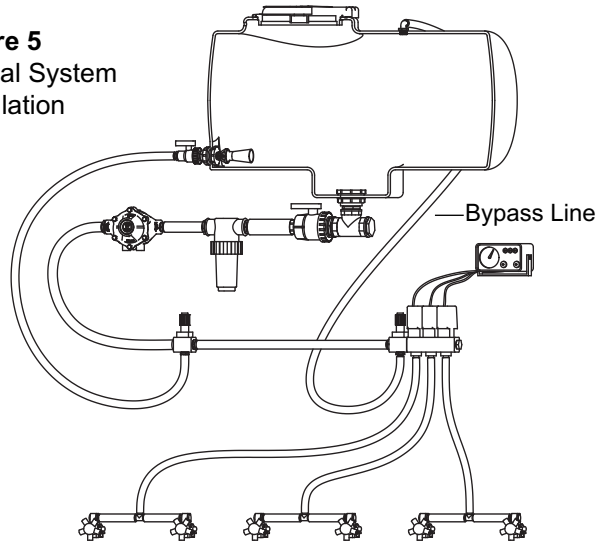


## Operation and Maintenance

WARNING: Never pump corrosive or abrasive liquids as these will cause rapid wear or deterioration of body, rotor, shaft and seals in the pump. The pump should be used only with liquids compatible with pump component materials. Never exceed maximum specified rpm and pressure. Never run pump dry. Failure to follow this warning will void the product warranty.

### Priming the Pump

To help prime the pump, keep the inlet or suction line as short as possible with a minimum of bends, elbows and kinks. Make sure all connections are tight and do not leak air. Make sure line strainer is free of debris. If pump does not self-prime, disconnect suction hose, fill with water and reconnect to liquid source. Often a squirt of oil into the ports of the pump will seal clearances and help priming.

### Care of the Pump

Hypro roller pumps are all carefully machined to close tolerance - high pressure operation depends on close-fitting parts. Proper care and maintenance will keep your pump wear at a minimum and will keep it running smoothly and trouble-free for a long time.

**Flush the Pump After Each Use**

**One of the common causes of faulty pump performance is "gumming" or corrosion inside the pump. This prevents the rollers from moving freely in their rotor slots. Flush the pump with a solution that will neutralize liquid pumped, mixed according to manufacturer's directions.**

**To Prevent Corrosion**

After cleaning pump as above, flush it with a 50-50 solution of permanent-type automobile antifreeze (containing a rust inhibitor) and water. A rust inhibitor can also be squirted into the ports of the pump. Turn shaft several times to draw protective liquid through pump and coat entire inner surface. Drain pump and plug ports to keep out air during storage. For short periods of idleness, noncorrosive liquids may be left in the pump, but **air must be kept out.** Plug ports or seal port connections.

**Rotation**

Pump rotation must be the same as shown by the arrows on the pump. Facing the shaft end of the pump, the suction port is on your left and the shaft must turn counterclockwise. If reverse rotation is desired, rotor and shaft assembly must be reversed so that the shaft extends through the endplate. See Reversing Rotation Section below for proper procedure.

**Note:** Configuration is opposite for 4001 and 4101 series.

## Reversing Rotation

1. Determine the rotor type of your pump by referring to exploded drawing on the parts list. The three types of rotors are NON-SCOOP, SCOOPED, and SLANTED SLOT.
2. Follow the steps listed in Repair Instructions for disassembly of the pump.
3. If your pump has a NON-SCOOP rotor (4001, 4101, 6500, 7560), it can be reversed merely by turning the rotor/shaft assembly around intact (without changing the position of the rotor on the shaft). Reassemble the pump with the driving end of shaft out the endplate side of the pump. (Standard pump rotors are driven from the body side.)
4. If your pump has a SCOOPED rotor (1200, 1500, 1700) or a SLANTED SLOT (7700) rotor, follow the following steps for reversing the shaft in the rotor.
   a. Loosen and remove the rotor set screw.
   b. Press the shaft out of the rotor.
   c. Reassemble the shaft and rotor with the driving end of shaft on the opposite side of the rotor from standard assembly.
   d. Before installing the rotor on the shaft, be sure it is positioned in the correct location on the shaft (diameter of shaft is slightly larger at rotor position). Center punch the shaft through rotor set screw hole. Then with a drill smaller than set screw - spot drill shaft so that set screw will hold securely. (Don't drill too deep - just enough so set screw will bite into shaft).
   e. Reassemble the pump with driving end of shaft extending out of **endplate** side of pump. (The standard pump rotor is driven from the **body** side.) Remember, the rotor position remains the same - the shaft only is reversed - "end for end."

**Note: Configuration is opposite from above for 4001 and 4101 series.**

### Standard NON-SCOOP Rotor

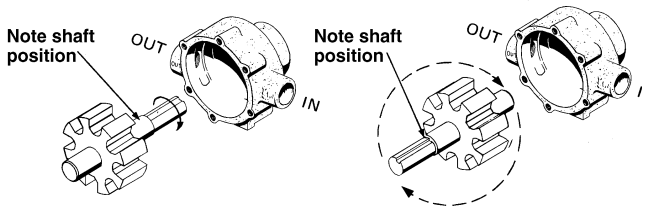


Standard **CCW** rotation to **CW** rotation

**Figure 6**

### SCOOPED Rotor

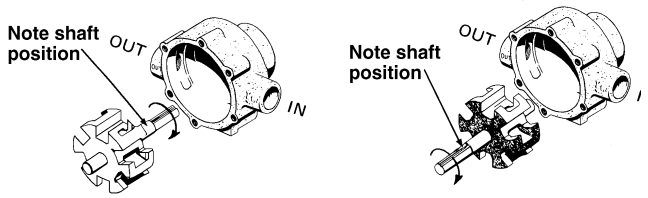


Standard **CCW** rotation to **CW** rotation

**Figure 7**

### SLANTED SLOT Rotor

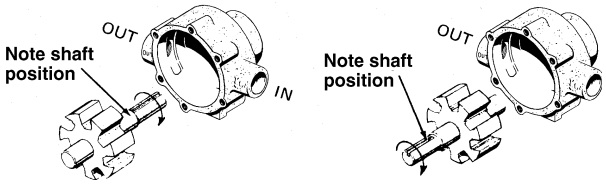


Standard **CCW** rotation to **CW** rotation

Diagram of 7-roller rotor with special slanted, wide roller slots (Series 7700). Note that slots should slant back from rotation direction.

**Figure 8**

# Repair Instructions

**NOTE**: Check our website for video repair instructions - www.hypropumps.com. Click on Tools.

## To Take the Pump Apart

1. Remove the adapter from the pump shaft.
2. File off any burrs on the pump shaft.
3. Using a screwdriver, pry off the bearing cover on the endplate and pump body
4. Remove the endplate bolts.
5. Support the pump at its ports in an endplate support fixture with the endplate down. Use wood blocks for Series 1500, 1700 and 4001/4101. Place on press bed. Center press on pump shaft and apply pressure to press the pump apart (See Figure 9).

**Figure 9**

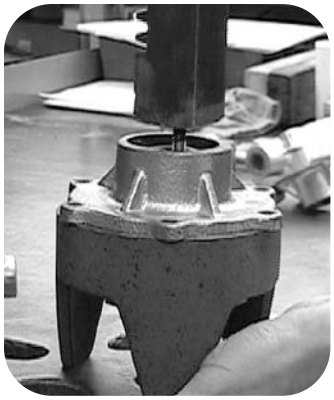

**Figure 10**

6. With the rollers exposed, remove them - examining each one carefully for excessive wear. When replacing damaged rollers, always replace the full set.
7. To remove the rotor with shaft from the endplate - support the endplate in an endplate support fixture with the rotor down. Center the bearing disassembly tool or 3/8" bolt, on pump shaft. Apply pressure to press shaft out of ball bearing (See Figure 10).
8. To remove the ball bearing - place the endplate in a endplate support fixture with the front of the endplate down (See Figure 11). Center bearing support tool and slowly press bearing out of casting. Repeat procedure to remove bearing from pump body (See Figure 12) using body support fixture.
9. After removing the ball bearing, check the seals in both endplate and pump body. If wear is evident or leakage has been noticed, punch the seals out with a screwdriver and hammer. Seals cannot be removed without damaging them.
10. To press the shaft out of the rotor, first carefully wash the rotor and shaft with kerosene - removing all traces of rust and other foreign matter. Use steel wool or emery cloth, rinsing parts afterward to wash off all emery dust. Remove the allen set screw. Support the rotor in the press through the slot in the base and press shaft through.

**Figure 11**

**Figure 12**

## While the Pump is Apart

Carefully inspect all parts for wear, such as:

- Undersize or swollen rollers in both length and diameter.
- Worn seals.
- Worn shaft at drive end, and pitted or grooved at the seal area.
- Rough bearings and loss of grease from the bearings.
- Undersize rotor and/or worn roller slots.
- Excessive wear in body - both on inside diameter and at back face.
- Body cracks at the bolt holes and at the o-ring sealing area.
- End wear (body, endplate and rotor).
- Proper size o-ring in the endplate.

After the above parts have been checked and the various points have been considered, you can decide if the pump is repairable. When worn parts have been replaced, always take up the end clearance by lightly sanding the endplate and matching body surface (See Figure 13). **NOTE: End clearance should not be more than .004 inches.**

### Inspect Inside of Endplate

If a groove is noticeable, the endplate should be resurfaced by rubbing it on a sheet of 80 grit emery paper (placed on flat surface) until all trace of wear has been removed. Rotate the endplate frequently to remove evenly the same amount of metal over the entire surface. **NOTE: This surface of the endplate must be perfectly flat. If attempt has been made to pry pump apart with a screwdriver, file off all nicks, burrs and other damage marks around the bolt holes.**

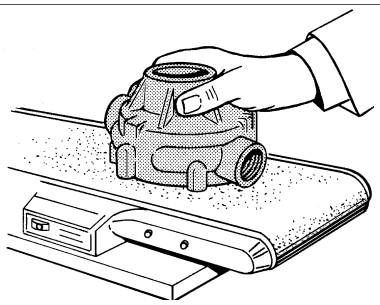

**Figure 13**

## Re-Assembly

### Replace Seals and Bearings

Carefully place the seal in the pump body with crimped side down. Press the seal to the bottom of the cavity, using the stepped end of the bearing & seal assembly tool (Figure 14). Then put the bearing in position in the pump body and press into place with counter-bored end of bearing & seal assembly tool (Figure 15). Repeat the above procedure with the endplate. Seat the o-ring in the groove. If necessary, make sure the o-ring stays in place by stretching it.

**Figure 14**

**Figure 15**

### Assemble Rotor and Shaft To Endplate

1. Install the shaft rotor assembly by carefully pushing the short end of the shaft rotor assembly through the shaft seal into the endplate. Place in the arbor press with the drive end of the shaft pointed down. Use the bearing support tool on top of the bearing and press the assembly together (Figure 16). Leave just enough clearance between the rotor and endplate so that rotor can be turned by hand. If it turns too freely, sand a little more off the body end that faces the endplate. You should notice a slight drag, but be able to turn shaft with an adapter on it, by hand. The “slight drag” will wear off after the pump has been used a short time. Installing new rollers, seals, bearings and shafts will not prove entirely satisfactory for volume and pressure unless end clearance is taken up.

**Figure 16**

**Figure 17**

**NOTE: If the endplate has been resurfaced, the body face must also be resurfaced to allow for material taken off the endplate. Follow same procedure as above with emery cloth. Before new parts are installed, all burrs should be removed - particularly in the rotor slots and body.**

**Do not machine clean the body casting. A more satisfactory job can be done by hand cleaning with an emery cloth. Wettable talc powder mixture (5 lbs. powder to 5 gallons water) can be used for breaking in a repaired pump if pump appears to be binding. Run pump for about 5 minutes. This will also serve to clean and remove corrosion from the pump. Follow with a clear rinse and protect from rust. (See Maintenance.)**

2. Remove the assembled portion from the arbor press and invert it on the press table with the bearing support tool under the bearing. Then place rollers in the roller slots as close to center of rotor as possible. Place the pump body over rotor and shaft, and carefully ease the end of the shaft past the lips of the seal in pump body (Figure 17). Center bearing support tool with counter-bored end down on inner race of ball bearing, and slowly press the pump body down to fit the endplate (Figure 18).
3. Turn pump over; line up bolt holes and replace assembly bolts. Alternately and evenly tighten the bolts as shown (Figure 19). NOTE: After bolts have been tightened, check to see if rotor is centered in pump case. Try to turn the pump shaft, using a crescent wrench on the shaft as a lever.

**Figure 18**

**Figure 19**

### Center Rotor in Pump Case

If pump turns hard:

1. Place short brass rod (or hardwood dowel) against end of shaft (Figure 20). Center rod on shaft (not on bearing). Tap lightly with hammer. Try turning shaft again.

**Figure 20**

2. If this fails to center the rotor to where it can be turned freely - tap other end of shaft, protecting it as above. When the shaft can be turned by hand - using wrench as above - it is not binding.
3. If the pump binds within and tapping does not free it, it may be necessary to “run the pump in” to wear off high spots. Use talc solution mentioned earlier. Check pump frequently during run-in.

## Repair Tool Kits

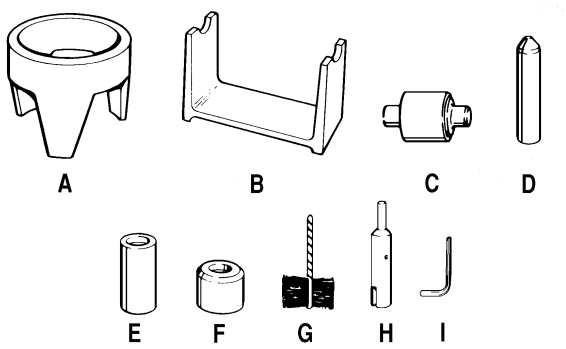


**Tool Kit No. 3011-0006 for Series 6500**

Consists of: (A = 3010-0001) Endplate Support Fixture;, (B = 3010-0002) Body Support Fixture, (C = 3010-0003) Bearing & Seal Assembly Tool, (D = 3010-0004) Bearing Disassembly Tool, (E = 3010-0010) Bearing Support Tool, (F = 3010-0014) Bearing Race Support Tool, (G = 3010-0066) Wire Brush, (H = 3010-0067) Brush Holder, (I = 3020-0009) 1/16" Allen Wrench, and Tool Box (3010-0168).

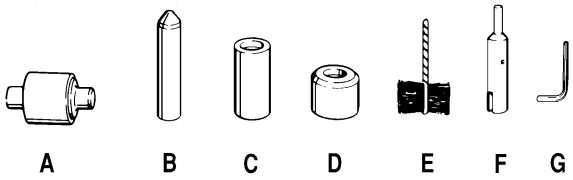


**Tool Kit No. 3011-0021 for Series 4001/4101**

Consists of: (A = 3010-0003) Bearing & Seal Assembly Tool, (B = 3010-0004) Bearing Disassembly Tool, (C = 3010-0010) Bearing Support Tool, (D = 3010-0014) Bearing Race Support Tool, (E = 3010-0066) Wire Brush, (F = 3010-0067) Brush Holder, (G = 3020-0009) 1/16" Allen Wrench, and Tool Box (3010-0168).

## Troubleshooting

| Symptom | Probable Cause(s) | Corrective Action |
|---|---|---|
| Pump does not prime. | Leak in suction line. | Check hose and fittings for leaks, and correct. |
| | Obstruction in suction line. | Inspect hose for obstruction such as debris or loose inner liner. |
| | Suction hose sucked to bottom or side of tank. | Cut a notch or “V” in end of suction hose. |
| | Rollers stuck in pump. | Disassemble pump and inspect rollers. |
| | Pump seals leaking air. | Replace seals. |
| | Pump turning in wrong direction. | Correct rotation of pump (See Reversing Pump). |
| Loss of pressure. | Clogged suction strainer. | Check strainer and clean it regularly. |
| | Kinked or blocked suction hose. | Inspect suction hose and repair as necessary. |
| | Air leak in inlet side plumbing. | Check hose and connections for leaks. Use pipe joint sealant and retighten connections. |
| | Relief valve setting too low or weakened spring. | Check relief valve and correct setting. |
| | Faulty gauge. | Replace gauge. |
| | Pump seals leak air. | Replace seals. |
| | Nozzle orifices worn. | Replace nozzles. |
| | Pump worn. | Repair pump (See Repair Instructions). |
| Pump will not turn. | Corrosion (rust), scale or residue. | Loosen endplate bolts. Squirt oil into ports to help free rotor. Retighten bolts. |
| | Solid object lodged in pump. | Disassemble pump and remove objects. |

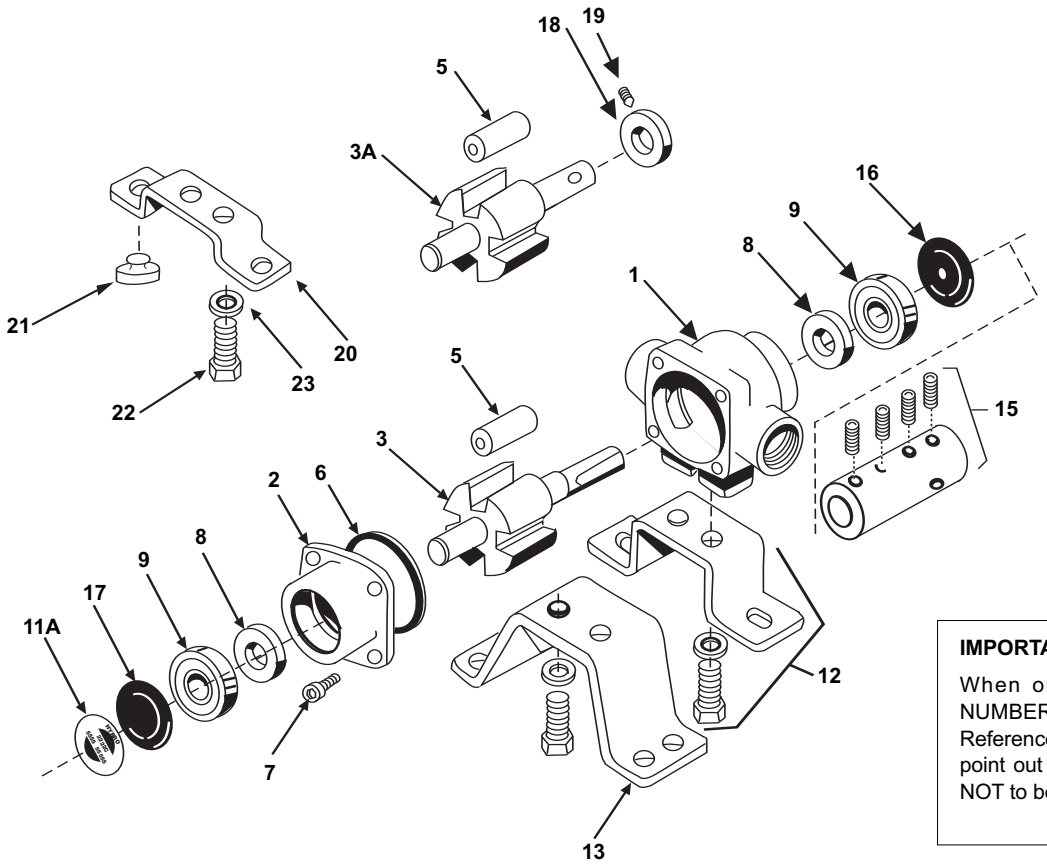


**IMPORTANT:**

When ordering parts, give PART NUMBER and PART DESCRIPTION. Reference Numbers are used ONLY to point out parts in the drawing and are NOT to be used as ordering numbers.

| Ref. No. | Qty. Req'd. | Part Number | Description |
|---|---|---|---|
| 1 | 1 | 0100-4001C | Body (Cast Iron) with Std. Seal (4001) |
| 1 | 1 | 0100-4101C | Body (Cast Iron) with Std. Seal (4101) |
| 1 | 1 | 0100-4001N | Body (Ni-Resist) with Std. Seal (4001) |
| 1 | 1 | 0100-4101N | Body (Ni-Resist) with Std. Seal (4101) |
| 1 | 1 | 0100-4001X | Body(SilverCast) with Std. Seal (4001) |
| 1 | 1 | 0100-4101X | Body(SilverCast) with Std. Seal (4101) |
| 2 | 1 | 0200-4001C | Endplate (Cast Iron) with Std. Seal (4001) |
| 2 | 1 | 0200-4101C | Endplate (Cast Iron) with Std. Seal (4101) |
| 2 | 1 | 0200-4001N | Endplate (Ni-Resist) with Std. Seal (4001) |
| 2 | 1 | 0200-4101N | Endplate (Ni-Resist) with Std. Seal (4101) |
| 2 | 1 | 0200-4001X | Endplate (SilverCast) with Std. Seal (4001) |
| 2 | 1 | 0200-4101X | Endplate (SilverCast) with Std. Seal (4101) |
| 3 | 1 | 0300-4001C | Rotor (Cast Iron) & Shaft Assembly (4001) |
| 3 | 1 | 0300-4101C | Rotor (Cast Iron) & Shaft Assembly (4101) |
| 3 | 1 | 3430-0765 | Rotor Assembly (Std. 4001 Ni-Resist & XL) |
| 3 | 1 | 3430-0766 | Rotor Assembly (Std. 4101 Ni-Resist & XL) |
| 3A | 1 | 3430-0780 | Rotor Assembly (Std. 4001 Ni-Resist & XL) |
| 3A | 1 | 3430-0781 | Rotor Assembly (Std. 4101 Ni-Resist & XL) |
| 5 | 4 | 1005-0002 | Super Rollers (Std.) |
| 5 | 4 | 1002-0002 | Polypropylene Rollers (Optional) |
| 5 | 4 | 1055-0002 | Teflon Rollers (Optional) |
| 6 | 1 | 1720-0104 | O-Ring Gasket for Endplate |
| 7 | 4 | 2220-0018 | Endplate Screw |
| 8 | 2 | 2107-0002 | Viton Seal (Std.) |
| 8 | 2 | 2102-0001 | Buna-N Seal (Optional) |
| 8 | 2 | 2102-0001T | Teflon Coated Buna-N Seal (Optional) |

| Ref. No. | Qty. Req'd. | Part Number | Description |
|---|---|---|---|
| 9 | 2 | 2000-0010 | Ball Bearing (High temp. grease) |
| 11A | 1 | | Name Plate (Specify pump model #) |
| 12 | 1 | 3420-0024 | Base Kit — **Sold Separately** Includes: 1 Base, 2 Bolts, and 2 Lock washers for mounting pump to electric motors with 3-1/2" shaft centerline |
| 13 | 1 | 3420-0025 | Base Kit — **Sold Separately** Includes: 1 Base, 2 Bolts, and 2 Lock washers for mounting pump to electric motors/gas engines with 4-3/16" shaft centerlines |
| 15 | 1 kit | 1320-0016 | Adapter with 4 set screws for gas engine mount (5/8" x 5/8") — **Sold Separately** |
| 15 | 1 kit | 1320-0015 | Adapter (5/8" x 3/4") — **Sold Separately** |
| 16 | 1 | 2300-0023 | Shaft Bearing Cover |
| 17 | 1 | 2300-0021 | Bearing Cover |
| 18 | 1 | 1420-0001 | Locking Collar |
| 19 | 1 | 2230-0001 | Set Screw |
| 20 | 1 | 1510-0054 | Base — **Sold Separately** |
| 21 | 2 | 1450-0003 | Bumper — **Sold Separately** |
| 22 | 2 | 2210-0003 | Bolt — **Sold Separately** |
| 23 | 2 | 2260-0002 | Lock Washer — **Sold Separately** |

**Repair Parts Kit No. 3430-0390** Consists of: (4) Ref. 5 Super Rollers, (1) Ref. 6 O-Ring Gasket, (2) Ref. 8 Viton Seals.

**Repair Parts Kit No. 3430-0158** Consists of: (4) Ref. 5 Polypropylene Rollers, (1) Ref. 6 O-Ring Gasket, (2) Ref. 8 Viton Seals.

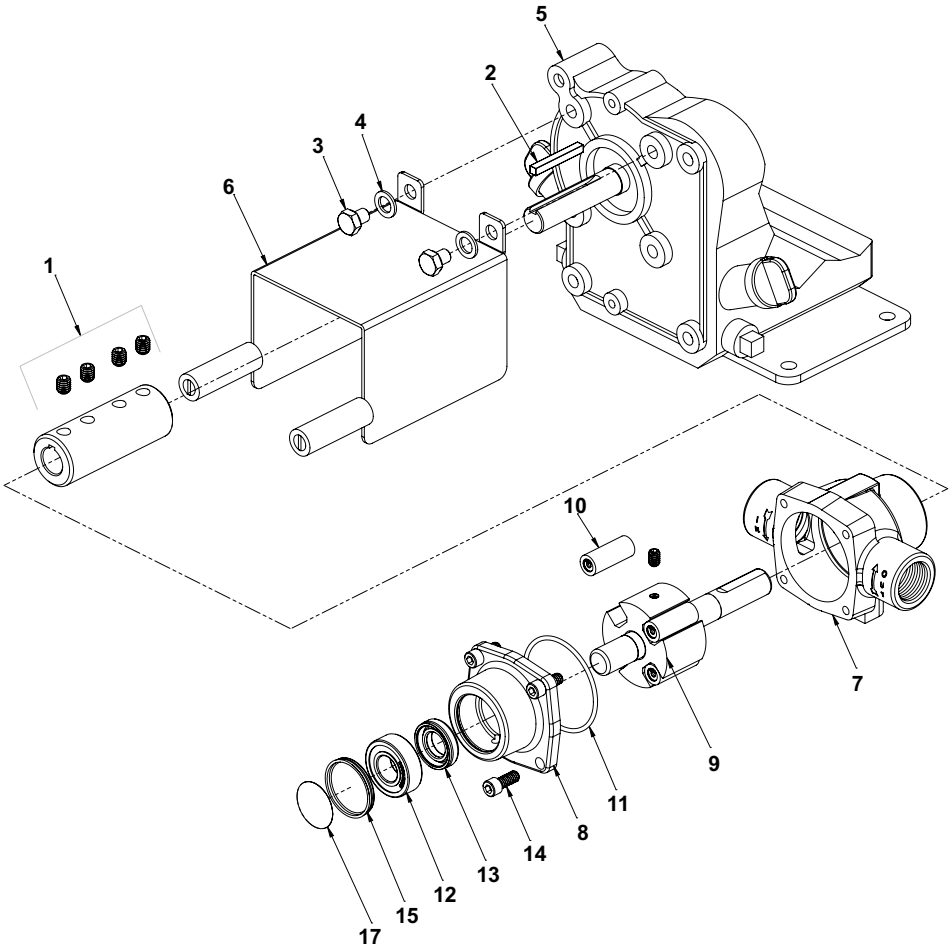


| Ref. No. | Qty. Req'd. | Part Number | Description |
|---|---|---|---|
| 1 | 1 | 1320-0016 | Adapter and Kit |
| 2 | 1 | 19209 | Key 3/16 x 1-1/2” |
| 3 | 2 | 2210-0166 | Hed Head Capscrew |
| 4 | 2 | 2270-0041 | Washer |
| 5 | 1 | 2549-0043 | Engine: 2.5 HP PowerPro |
| 6 | 1 | 2840-0084 | Shield |
| 7 | 1 | 0100-4101C | Body (Cast Iron) |
| 7 | 1 | 0100-4101X | Body (SilverCast) |
| 8 | 1 | 0200-4101C | Endplate (Cast Iron) |
| 8 | 1 | 0200-4101X | Endplate (SilverCast) |
| 9 | 1 | 0300-4101C | Rotor & Shaft Assembly (Cast Iron) |
| 9 | 1 | 3430-0766 | Rotor Assembly (SilverCast) |
| 10 | 4 | 1005-0002 | Super Rollers |
| 11 | 1 | 1720-0104 | O-ring Gasket for Endplate |
| 12 | 2 | 2000-0010 | Ball Bearing |
| 13 | 2 | 2107-0002 | Viton Seal |
| 14 | 4 | 2220-0018 | Socket Head Screw |
| 15 | 1 | 2300-0021 | Bearing Cover |
| 16 | 1 | 2300-0023 | Bearing Cover w/Hole |
| 17 | 1 | 6031-0299 | Decal |

**IMPORTANT:**

When ordering parts, give PART NUMBER and PART DESCRIPTION. Reference Numbers are used ONLY to point out parts in the drawing and are NOT to be used as ordering numbers.

**Repair Parts Kit No. 3430-0390** Consists of: (4) Ref. 10 Super Rollers, (1) Ref. 11 O-Ring Gasket, (2) Ref. 13 Viton Seals.

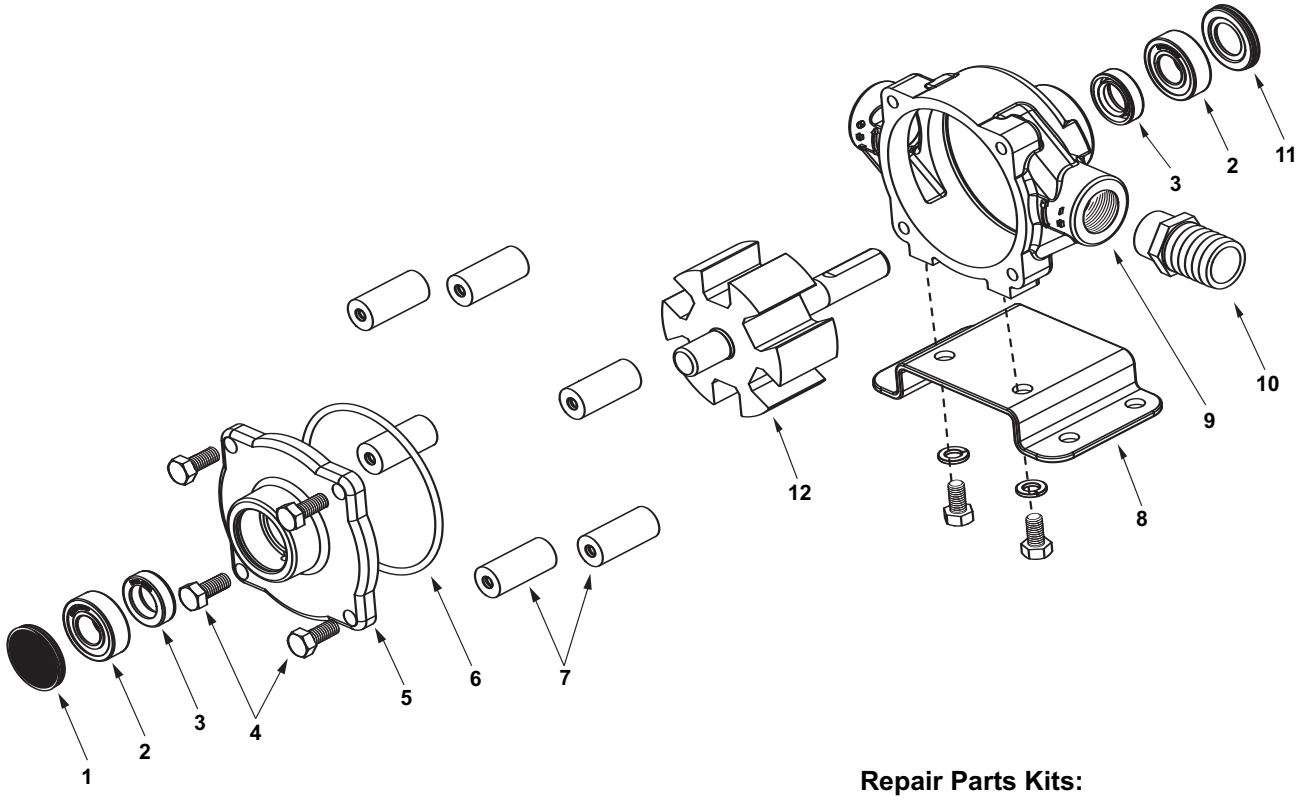


**IMPORTANT:**

When ordering parts, give PART NUMBER and PART DESCRIPTION. Reference Numbers are used ONLY to point out parts in the drawing and are NOT to be used as ordering numbers.

**Repair Parts Kits:**

**No. 3430-0380** Consists of (6) Ref. 7 Super Rollers, (1) Ref. 6 O-ring, and (2) Ref. 3 Viton seals.

**No. 3430-0175** Consists of (6) Ref. 7 Polypropylene Rollers, (1) Ref. 6 O-ring, and (2) Ref. 3 Viton seals.

| Ref. No. | Qty. Req'd. | Part Number | Description |
|---|---|---|---|
| 1 | 1 | 2300-0021 | Bearing Cover |
| 2 | 2 | 2000-0010 | Sealed Ball Bearing |
| 3 | 2 | 2107-0002 | Viton Seal (Standard) |
| 3 | 2 | 2102-0001 | Buna-N Seal (Optional) |
| 3 | 2 | 2102-0001T | Teflon-coated Buna-N Seal (Optional) |
| 4 | 4 | 2210-0004 | Bolts |
| 5 | 1 | 0200-6600C | Endplate (Cast Iron) with Seal |
| 5 | 1 | 0200-6600N | Endplate (Ni-Resist) with Seal |
| 5 | 1 | 0200-6600X | Endplate (SilverCast) with Seal |
| 6 | 1 | 1720-0008 | O-ring Gasket for Endplate |
| 7 | 6 | 1005-0004 | Super Roller (Standard) |
| 7 | 6 | 1002-0004 | Polypropylene Roller (Optional) |
| 7 | 6 | 1055-0004 | Teflon Roller (Optional) |

| Ref. No. | Qty. Req'd. | Part Number | Description |
|---|---|---|---|
| 8 | 1 kit | 3420-0023 | Base Kit - **Sold Separately** Includes: (1) Base, (2) Bolts and (2) Washers |
| 9 | 1 | 0100-6600C | Body (Cast Iron) with Seal |
| 9 | 1 | 0100-6600N | Body (Ni-Resist) with Seal |
| 9 | 1 | 0100-6600X | Body (SilverCast) with Seal |
| 10 | 1 | 2404-0052 | 1” Hose Barb |
| 11 | 1 | 2300-0023 | Shaft Bearing Cover |
| 12 | 1 | 0300-6600C | Rotor Assembly (Cast Iron) |
| 12 | 1 | 3430-0767 | Rotor Assembly (Std. Ni-Resist & XL) |

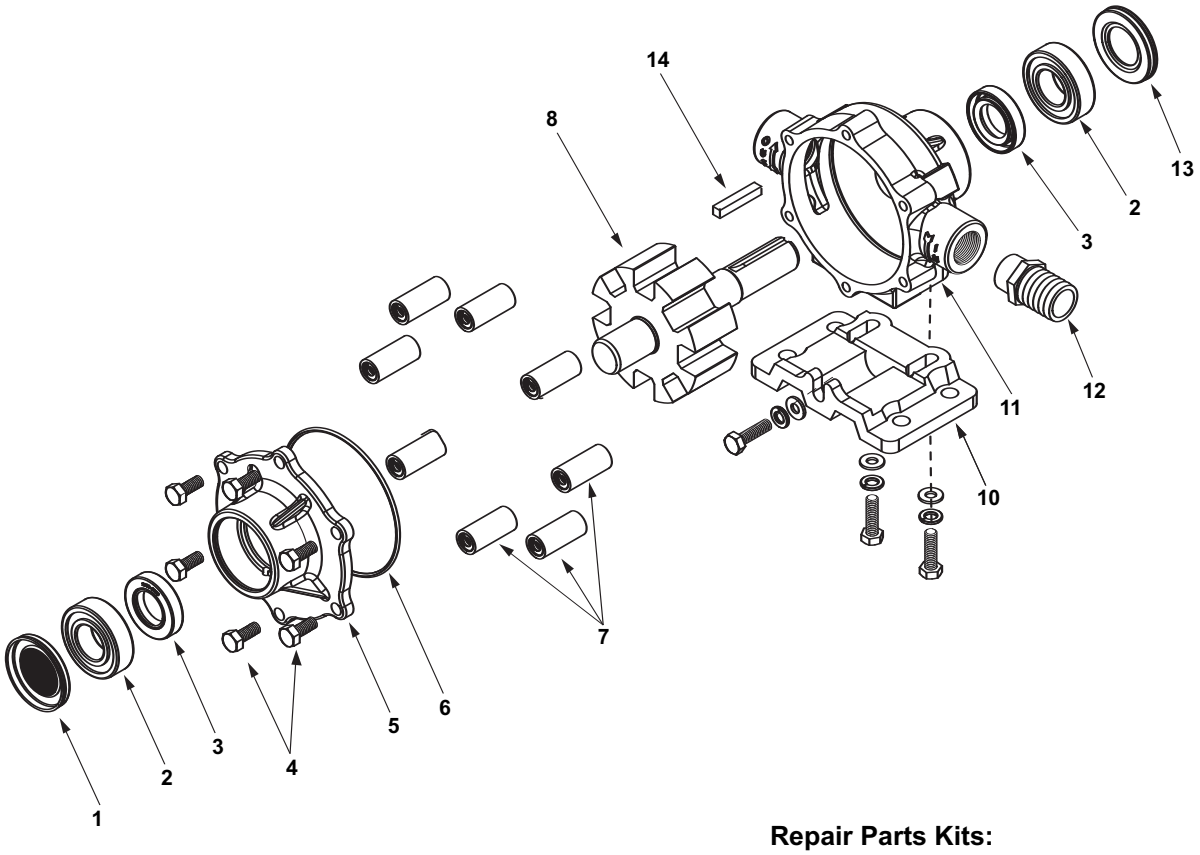


**IMPORTANT:**

When ordering parts, give PART NUMBER and PART DESCRIPTION. Reference Numbers are used ONLY to point out parts in the drawing and are NOT to be used as ordering numbers.

**Repair Parts Kits:**

**No. 3430-0381** Consists of (8) Ref. 7 Super Rollers, (1) Ref. 6 O-ring, and (2) Ref. 3 Viton seals

**No. 3430-0167** Consists of (8) Ref. 7 Polypropylene Rollers, (1) Ref. 6 O-ring, and (2) Ref. 3 Viton seals

| Ref. No. | Qty. Req'd. | Part Number | Description |
|---|---|---|---|
| 1 | 1 | 2300-0020 | Bearing Cover |
| 2 | 2 | 2008-0001 | Sealed Ball Bearing |
| 3 | 2 | 2112-0003 | Viton Seal (Standard) |
| 3 | 2 | 2112-0001 | Buna-N Seal (Optional) |
| 4 | 6 | 2210-0004 | Bolts |
| 5 | 1 | 0204-7500C | Endplate (Cast Iron) with Seal |
| 5 | 1 | 0204-7500N | Endplate (Ni-Resist) with Seal |
| 5 | 1 | 0204-7500X | Endplate (SilverCast) with Seal |
| 6 | 1 | 1720-0014 | O-ring Gasket for Endplate |
| 7 | 8 | 1005-0004 | Super Roller (Standard) |
| 7 | 8 | 1002-0004 | Polypropylene Roller (Optional) |
| 7 | 8 | 1055-0004 | Teflon Roller (Optional) |

| Ref. No. | Qty. Req'd. | Part Number | Description |
|---|---|---|---|
| 8 | 1 | 3430-0745 | Rotor Assembly (Std. Ni-Resist & XL) |
| 8 | 1 | 0308-7560C | Rotor Assembly (Cast Iron only) |
| 10 | 1 kit | 3420-0003 | Base Kit - **Sold Separately** Includes: (1) Base, (3) Bolts and (3) Washers |
| 11 | 1 | 0104-7500C | Body (Cast Iron) with Seal |
| 11 | 1 | 0104-7500N | Body (Ni-Resist) with Seal |
| 11 | 1 | 0104-7500X | Body (SilverCast) with Seal |
| 12 | 1 | 2404-0052 | 1” Hose Barb |
| 13 | 1 | 2300-0022 | Shaft Bearing Cover |
| 14 | 1 | 1610-0005 | Key |
| | 1 | 1610-0059 | Key (Stainless Steel) |

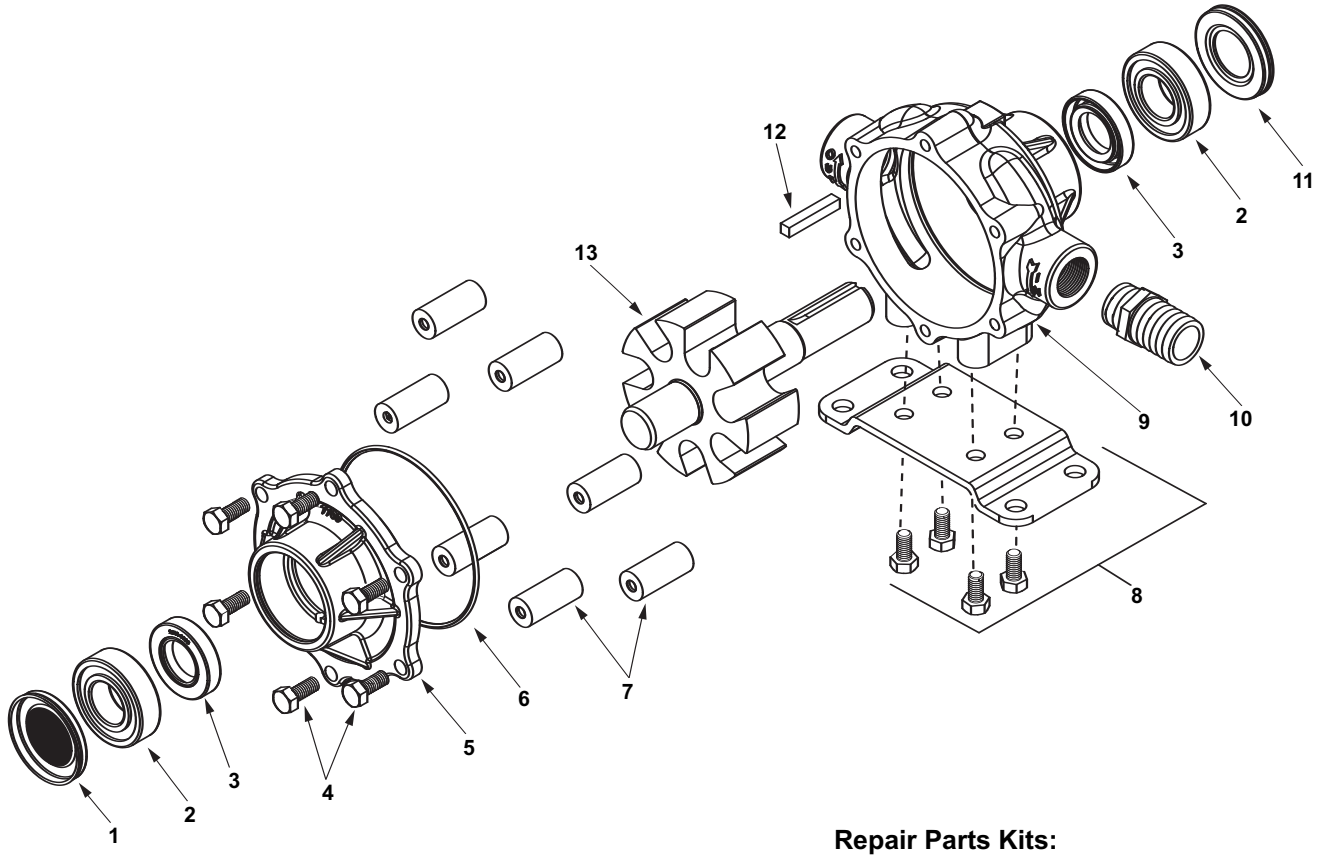


**IMPORTANT:**

When ordering parts, give PART NUMBER and PART DESCRIPTION. Reference Numbers are used ONLY to point out parts in the drawing and are NOT to be used as ordering numbers.

**Repair Parts Kits:**

**No. 3430-0384** Consists of (8) Ref. 7 Super Rollers, (1) Ref. 6 O-ring, and (2) Ref. 3 Viton seals

**No. 3430-0167** Consists of (8) Ref. 7 Polypropylene Rollers, (1) Ref. 6 O-ring, and (2) Ref. 3 Viton seals

| Ref. No. | Qty. Req'd. | Part Number | Description |
|---|---|---|---|
| 1 | 1 | 2300-0020 | Bearing Cover |
| 2 | 2 | 2008-0001 | Sealed Ball Bearing |
| 3 | 2 | 2112-0003 | Viton Seal (Standard) |
| 3 | 2 | 2112-0001 | Buna-N Seal (Optional) |
| 4 | 6 | 2210-0004 | Bolts |
| 5 | 1 | 0200-7700C | Endplate (Cast Iron) with Seal |
| 5 | 1 | 0200-7700N | Endplate (Ni-Resist) with Seal |
| 5 | 1 | 0200-7700X | Endplate (SilverCast) with Seal |
| 6 | 1 | 1720-0014 | O-ring Gasket for Endplate |
| 7 | 8 | 1005-0004 | Super Roller (Standard) |
| 7 | 8 | 1002-0004 | Polypropylene Roller (Optional) |
| 7 | 8 | 1055-0004 | Teflon Roller (Optional) |
| 8 | 1 kit | 3420-0010 | Base Kit - **Sold Separately** Includes: (1) Base and (4) Bolts |

| Ref. No. | Qty. Req'd. | Part Number | Description |
|---|---|---|---|
| 9 | 1 | 0100-7700C | Body (Cast Iron) with Seal |
| 9 | 1 | 0100-7700N | Body (Ni-Resist) with Seal |
| 9 | 1 | 0100-7700X | Body (SilverCast) with Seal |
| 10 | 1 | 2404-0052 | 1” Hose Barb |
| 11 | 1 | 2300-0022 | Shaft Bearing Cover |
| 12 | 1 | 1610-0005 | Key |
| 13 | 1 | 0300-7700C | Rotor Assembly (Cast Iron) |
| 13 | 1 | 0300-7700N | Rotor Assembly (Ni-Resist) |
| 13 | 1 | 0300-7700X | Rotor Assembly (SilverCast) |
| 13 | 1 | 0301-7700C | Rotor Assembly (Cast Iron) **Rev. Rot.** |
| 13 | 1 | 0301-7700N | Rotor Assembly (Ni-Resist) **Rev. Rot.** |
| 13 | 1 | 0301-7700X | Rotor Assembly (SilverCast) **Rev.Rot.** |

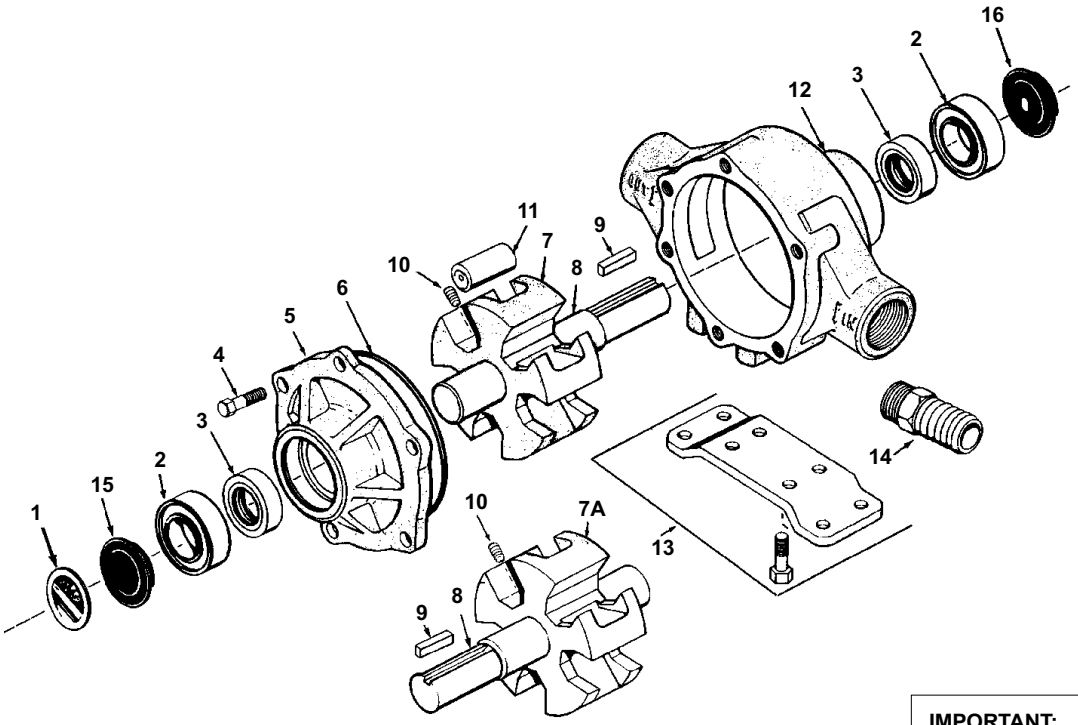


**IMPORTANT:**

When ordering parts, give PART NUMBER and PART DESCRIPTION. Reference Numbers are used ONLY to point out parts in the drawing and are NOT to be used as ordering numbers.

| Ref. No. | Qty. Req'd. | Part Number | Description |
|---|---|---|---|
| 1 | 1 | 6031-0258 | Name Plate (Specify Pump Model #) |
| 2 | 2 | 2008-0001 | Sealed Ball Bearing |
| 3 | 2 | 2112-0003 | Viton Seal (Standard) |
| 3 | 2 | 2112-0001 | Buna-N Seal (Optional) |
| 4 | 6 | 2210-0005 | Bolt |
| 5 | 1 | 0200-1700C | Endplate (Cast Iron) with Seal |
| 5 | 1 | 0200-1700N | Endplate (Ni-Resist) with Seal |
| 5 | 1 | 0200-1700X | Endplate (SilverCast) with Seal |
| 6 | 1 | 1720-0099 | O-ring Gasket for Endplate |
| 7 | 1 | 0300-1700C | Rotor (Cast Iron) with shaft (Std. Rotation) |
| 7 | 1 | 0300-1700N | Rotor (Ni-Resist) with shaft (Std. Rotation) |
| 7 | 1 | 0300-1700X | Rotor (SilverCast) with shaft (Std. Rotation) |
| 7A | 1 | 0301-1700C | Rotor (Cast Iron) w/shaft (Reverse Rot.) |
| 7A | 1 | 0301-1700N | Rotor (Ni-Resist) w/shaft (Reverse Rot.) |
| 7A | 1 | 0301-1700X | Rotor (SilverCast) w/shaft (Reverse Rot.) |

| Ref. No. | Qty. Req'd. | Part Number | Description |
|---|---|---|---|
| 8 | 1 | 0500-1502 | Shaft Only |
| 9 | 1 | 1610-0005 | Key |
| 10 | 1 | 2230-0018 | Set Screw |
| 10 | 1 | 2230-0034 | Set Screw (SilverCast Only) |
| 11 | 5 | 1005-0005 | Super Roller (Standard) |
| 11 | 5 | 1002-0005 | Polypropylene Roller (Optional) |
| 11 | 5 | 1055-0005 | Teflon Roller (Optional) |
| 12 | 1 | 0100-1700C | Body (Cast Iron) with Seal |
| 12 | 1 | 0100-1700N | Body (Ni-Resist) with Seal |
| 12 | 1 | 0100-1700X | Body (SilverCast) with Seal |
| 13 | 1 kit | 3420-0010 | Base Kit — **Sold Separately** Includes: (1) Base and (4) Bolts |
| 14 | 1 | 2404-0191 | 1-1/4" Hose Barb |
| 15 | 1 | 2300-0020 | Bearing Cover |
| 16 | 1 | 2300-0022 | Shaft Bearing Cover |

See Page 17 for the proper coupler or adapter.

**Repair Parts Kit No. 3430-0437** Consists of: (5) Ref. 11 Super Rollers, (1) Ref. 6 O-Ring Gasket, and (2) Ref. 3 Viton Seals.

**Repair Parts Kit No. 3430-0383 (Universal)** Consists of: (6) Ref. 11 Super Rollers, (2) Ref. 6 O-Ring Gaskets, and (2) Ref. 3 Viton Seals.

**Repair Parts Kit No. 3430-0160** Consists of: (5) Ref. 11 Polypropylene Rollers and (1) Ref. 6 O-Ring Gasket, and (2) Ref. 3 Buna-N Seals.

**Repair Parts Kit No. 3430-0161** Consists of: (5) Ref. 11 Polypropylene Rollers and (1) Ref. 6 O-Ring Gasket, and (2) Ref. 3 Viton Seals.

**Repair Parts Kit No. 3430-0407** Consists of: (5) Ref. 11 Super Rollers, (1) Ref. 6 O-Ring Gasket, (2) Ref. 3 Viton Seals and (2) Ref. 2 Sealed Ball Bearings.

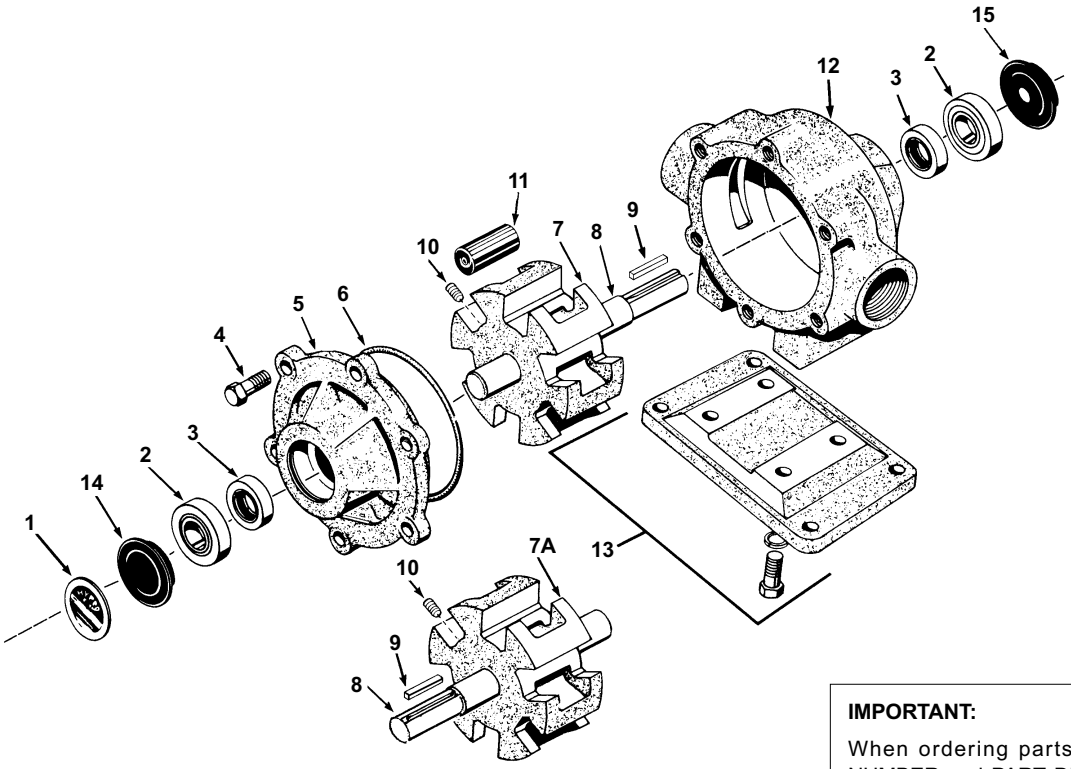


**IMPORTANT:**

When ordering parts, give PART NUMBER and PART DESCRIPTION. Reference Numbers are used ONLY to point out parts in the drawing and are NOT to be used as ordering numbers.

| Ref. No. | Qty. Req'd. | Part Number | Description |
|---|---|---|---|
| 1 | 1 | 6031-0258 | Name Plate (Specify Pump Model #) |
| 2 | 2 | 2008-0001 | Sealed Ball Bearing |
| 3 | 2 | 2112-0001 | Buna-N Seal (Standard) |
| 3 | 2 | 2112-0003 | Viton Seal (Optional) (Std. for SilverCast) |
| 4 | 6 | 2210-0026 | Bolt |
| 5 | 1 | 0200-1500C | Endplate (Cast Iron) with Seal |
| 5 | 1 | 0200-1500N | Endplate (Ni-Resist) with Seal |
| 5 | 1 | 0200-1500X | Endplate (SilverCast) with Seal |
| 6 | 1 | 1720-0003 | O-ring Gasket for Endplate |
| 7 | 1 | 0300-1502C | Rotor (Cast Iron) with shaft (Std. Rotation) |
| 7 | 1 | 0300-1502N | Rotor (Ni-Resist) with shaft (Std. Rotation) |
| 7 | 1 | 0300-1502X | Rotor (SilverCast) with shaft (Std. Rotation) |
| 7A | 1 | 0301-1502C | Rotor (Cast Iron) w/shaft (Reverse Rot.) |
| 7A | 1 | 0301-1502N | Rotor (Ni-Resist) w/shaft (Reverse Rot.) |
| 7A | 1 | 0301-1502X | Rotor (SilverCast) w/shaft (Reverse Rot.) |
| 8 | 1 | 0500-1502 | Shaft Only |

| Ref. No. | Qty. Req'd. | Part Number | Description |
|---|---|---|---|
| 9 | 1 | 1610-0005 | Key |
| 10 | 1 | 2230-0018 | Set Screw |
| 10 | 1 | 2230-0034 | Set Screw (SilverCast Only) |
| 11 | 6 | 1005-0005 | Super Roller (Standard) |
| 11 | 6 | 1002-0005 | Polypropylene Roller (Optional) |
| 11 | 6 | 1055-0005 | Teflon Roller (Optional) |
| 12 | 1 | 0100-1500C | Body (Cast Iron) with Seal |
| 12 | 1 | 0100-1500N | Body (Ni-Resist) with Seal |
| 12 | 1 | 0100-1500X | Body (SilverCast) with Seal |
| 13 | 1 kit | 3420-0004 | Base Kit — **Sold Separately** Includes: (1) Base, (4) Bolts and (4) Lockwashers |
| 14 | 1 | 2300-0020 | Bearing Cover |
| 15 | 1 | 2300-0022 | Shaft Bearing Cover |

See Page 17 for the proper coupler or adapter.

**Repair Parts Kit No. 3430-0383 (Universal)** Consists of: (6) Ref. 11 Super Rollers, (2) Ref. 6 O-Ring Gaskets, and (2) Ref. 3 Viton Seals.

**Repair Parts Kit No. 3430-0386** Consists of: (6) Ref. 11 Super Rollers, (1) Ref. 6 O-Ring Gasket, and (2) Ref. 3 Viton Seals.

**Repair Parts Kit No. 3430-0387** Consists of: (6) Ref. 11 Super Rollers, (1) Ref. 6 O-Ring Gasket, and (2) Ref. 3 Buna-N Seals.

**Repair Parts Kit No. 3430-0162** Consists of: (6) Ref. 11 Polypropylene Rollers and (1) Ref. 6 O-Ring Gasket.

**Repair Parts Kit No. 3430-0164** Consists of: (6) Ref. 11 Polypropylene Rollers, (1) Ref. 6 O-Ring Gasket, and (2) Ref. 3 Viton Seals.

**Repair Parts Kit No. 3430-0163** Consists of: (6) Ref. 11 Polypropylene Rollers, (1) Ref. 6 O-Ring Gasket, and (2) Ref. 3 Buna-N Seals.

**Repair Parts Kit No. 3430-0406** Consists of: (6) Ref. 11 Super Rollers, (1) Ref. 6 O-Ring Gasket, (2) Ref. 3 Viton Seals and (2) Ref. 2 Sealed Ball Bearings.

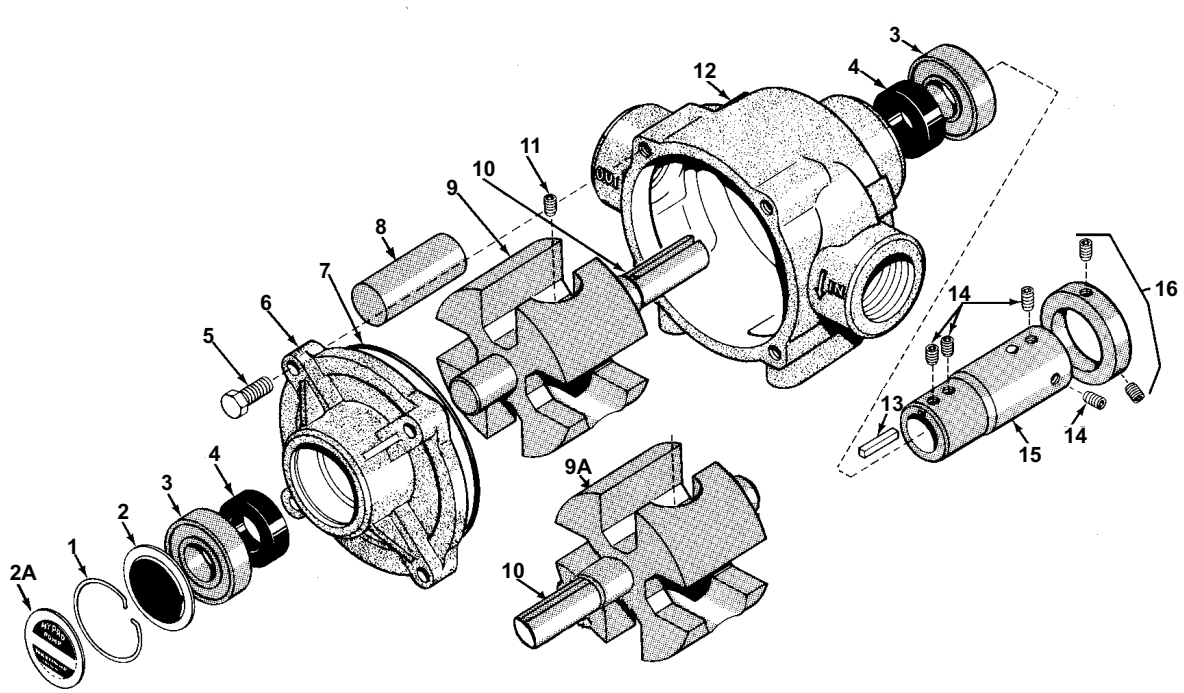


| Ref. No. | Qty. Req'd. | Part Number | Description |
|---|---|---|---|
| 1 | 1 | 1800-0013 | Retainer Ring |
| 2 | 1 | 2840-0049 | Bearing Cover |
| 2A | 1 | 6031-0258 | Name Plate (Specify Pump Model #) |
| 3 | 2 | 2001-0006 | Ball Bearing |
| 4 | 2 | 2112-0008 | Buna-N Seal (Standard) |
| 4 | 2 | 2112-0009 | Viton Seal (Optional) |
| 5 | 4 | 2210-0019 | Hex Head Bolt |
| 6 | 1 | 0200-1200C | Endplate (Cast Iron) with Seal |
| 7 | 1 | 1720-0127 | O-ring Gasket for Endplate |
| 8 | 4 | 1005-0006 | Super Roller (Standard) |
| 9 | 1 | 0300-1200C | Rotor (Cast Iron) with shaft (Std. Rotation) |
| 9A | 1 | 0301-1200C | Rotor (Cast Iron) with shaft (Rev. Rotation) |

**Parts Kit No. 3430-0374** Consists of (4) Ref. 8 Super Rollers, (1) Ref. 7 O-Ring, and (2) Ref. 4 Buna-N Seals.

| Ref. No. | Qty. Req'd. | Part Number | Description |
|---|---|---|---|
| 10 | 1 | 0500-1200 | Shaft |
| 11 | 1 | 2230-0018 | Set Screw |
| 12 | 1 | 0100-1200C | Body (Cast Iron) with Seal |
| 13 | 1 | 1610-0005 | Key |
| 14 | 1 kit | 3410-0031 | Set Screw Kit |
| 15 | 1 | 1320-0081 | 1-3/8" 6-spline 540 rpm PTO Adapter (Forged Steel) Includes Kit No. 3410-0031 **Sold Separately** |
| 16 | 1 kit | 3430-0207 | Locking Collar Kit — **Sold Separately** Includes: (1) Collar and (2) Set Screws |

**ORDER PARTS FROM YOUR SUPPLIER**

Locking Collar Kit No. 3430-0207
For Series 1200 Roller Pumps

This locking collar kit holds the pump driver shaft securely on the tractor PTO shaft. It is designed to increase pump life by reducing pump and PTO shaft wear due to vibration. To install locking collar:

1. Slide collar onto pump driver shaft.
2. Thread the longer set screw through the locking collar and partially through the threaded hole in the pump driver shaft. **IMPORTANT:** It is necessary to allow a minimum of 1/8" clearance between the locking collar and the pump driver shaft at set screw.
3. Thread the shorter set screw into the other threaded hole in the locking collar.
4. Slide pump driver hub over PTO shaft. Be sure PTO groove is under set screw.
5. Tighten the longer screw very securely with a 3/16" allen wrench.
6. Tighten the shorter set screw very securely with the same wrench. This binds set screw which prevents it from coming loose.
7. **NOTE:** Locking collar is off-center on the pump driver shaft when properly installed.

# Roller Pump Performance Chart

**U.S. Units** | **Metric Units**

## Series 4000

### 4001 Models

| PSI | 0 | | 25 | | 50 | | 75 | | 100 | | 125 | | 150 | |
|---|---|---|---|---|---|---|---|---|---|---|---|---|---|---|
| RPM | GPM | HP | GPM | HP | GPM | HP | GPM | HP | GPM | HP | GPM | HP | GPM | HP |
| 1100 | 5.5 | .06 | 4.9 | .14 | 4.4 | .24 | 4.1 | .34 | 3.8 | .41 | 3.5 | .51 | 3.3 | .62 |
| 1400 | 7.1 | .10 | 6.4 | .20 | 5.9 | .32 | 5.6 | .44 | 5.3 | .56 | 5.0 | .68 | 4.8 | .78 |
| 1800 | 9.1 | .14 | 8.5 | .30 | 8.0 | .46 | 7.6 | .62 | 7.3 | .78 | 7.0 | .95 | 6.7 | 1.1 |

| BAR | 0 | | 1.7 | | 3.4 | | 5.2 | | 6.9 | | 8.6 | | 10.3 | |
|---|---|---|---|---|---|---|---|---|---|---|---|---|---|---|
| RPM | LPM | HP | LPM | HP | LPM | HP | LPM | HP | LPM | HP | LPM | HP | LPM | HP |
| 1100 | 20.8 | 0.06 | 18.5 | 0.14 | 16.6 | .24 | 15.5 | 0.34 | 14.4 | 0.41 | 13.2 | 0.51 | 12.5 | 0.62 |
| 1400 | 26.9 | 0.1 | 24.2 | 0.2 | 22.3 | 0.32 | 21.2 | 0.44 | 20.1 | 0.56 | 18.9 | 0.66 | 18.2 | 0.78 |
| 1800 | 34.4 | 0.14 | 32.2 | 0.3 | 30.3 | 0.46 | 28.7 | 0.62 | 27.6 | 0.78 | 26.5 | 0.95 | 25.4 | 1.1 |

### 4101 Models

| PSI | 0 | | 25 | | 50 | | 75 | | 100 | | 125 | | 150 | |
|---|---|---|---|---|---|---|---|---|---|---|---|---|---|---|
| RPM | GPM | HP | GPM | HP | GPM | HP | GPM | HP | GPM | HP | GPM | HP | GPM | HP |
| 1800 | 5.0 | .11 | 4.8 | .21 | 4.5 | .34 | 4.2 | .45 | 3.9 | .56 | 3.7 | .68 | 3.4 | .78 |
| 2200 | 6.2 | .14 | 5.8 | .27 | 5.6 | .40 | 5.4 | .55 | 5.0 | .68 | 4.7 | .82 | 4.4 | .96 |
| 2600 | 7.2 | .16 | 6.9 | .30 | 6.6 | .46 | 6.4 | .62 | 6.0 | .76 | 5.7 | .92 | 5.4 | 1.08 |

| BAR | 0 | | 1.7 | | 3.4 | | 5.2 | | 6.9 | | 8.6 | | 10.3 | |
|---|---|---|---|---|---|---|---|---|---|---|---|---|---|---|
| RPM | LPM | HP | LPM | HP | LPM | HP | LPM | HP | LPM | HP | LPM | HP | LPM | HP |
| 1800 | 18.9 | 0.11 | 18.1 | 0.21 | 17.0 | 0.34 | 15.9 | 0.45 | 14.8 | 0.56 | 14.0 | 0.68 | 12.9 | 0.78 |
| 2200 | 23.5 | 0.14 | 21.9 | 0.27 | 21.2 | 0.4 | 20.4 | 0.55 | 18.9 | 0.68 | 17.8 | 0.82 | 16.6 | 0.96 |
| 2600 | 27.3 | 0.16 | 26.1 | 0.3 | 25.0 | 0.46 | 24.2 | 0.62 | 22.7 | 0.76 | 21.6 | 0.92 | 20.4 | 1.08 |

## Series 6500

| PSI | 0 | | 50 | | 100 | | 150 | | 200 | | 250 | | 300 | |
|---|---|---|---|---|---|---|---|---|---|---|---|---|---|---|
| RPM | GPM | HP | GPM | HP | GPM | HP | GPM | HP | GPM | HP | GPM | HP | GPM | HP |
| 540 | 9.7 | .08 | 8.0 | .38 | 7.2 | .68 | 6.6 | .97 | 5.6 | 1.29 | 4.9 | 1.65 | 4.3 | 1.91 |
| 1000 | 18.2 | .20 | 16.5 | .71 | 15.4 | 1.26 | 14.7 | 1.80 | 14.0 | 2.34 | 13.4 | 2.91 | 12.7 | 3.47 |
| 1200 | 21.8 | .30 | 20.1 | .90 | 19.1 | 1.51 | 18.2 | 2.14 | 17.3 | 2.84 | 16.5 | 3.48 | 15.7 | 4.17 |

| BAR | 0 | | 3.4 | | 6.9 | | 10.3 | | 13.8 | | 17.2 | | 20.7 | |
|---|---|---|---|---|---|---|---|---|---|---|---|---|---|---|
| RPM | LPM | HP | LPM | HP | LPM | HP | LPM | HP | LPM | HP | LPM | HP | LPM | HP |
| 540 | 36.7 | 0.08 | 30.3 | 0.38 | 27.3 | 0.68 | 25 | 0.97 | 21.2 | 1.29 | 18.5 | 1.65 | 16.3 | 1.91 |
| 1000 | 68.9 | 0.2 | 62.4 | 0.71 | 58.3 | 1.26 | 55.6 | 1.8 | 53 | 2.34 | 50.7 | 2.91 | 48.1 | 3.47 |
| 1200 | 82.5 | 0.3 | 76.1 | 0.9 | 72.3 | 1.51 | 68.9 | 2.14 | 65.5 | 2.84 | 62.4 | 3.48 | 59.4 | 4.17 |

## Series 7700

| PSI | 0 | | 50 | | 100 | | 150 | | 200 | |
|---|---|---|---|---|---|---|---|---|---|---|
| RPM | GPM | HP | GPM | HP | GPM | HP | GPM | HP | GPM | HP |
| 540 | 14.2 | .23 | 12.9 | .56 | 11.9 | 1.10 | 11.2 | 1.64 | 10.3 | 2.22 |
| 600 | 15.3 | .28 | 14.0 | .62 | 13.0 | 1.20 | 12.3 | 1.80 | 11.6 | 2.44 |
| 800 | 22.1 | .37 | 20.7 | .86 | 19.5 | 1.66 | 18.6 | 2.40 | 17.8 | 3.26 |

| BAR | 0 | | 3.4 | | 6.9 | | 10.3 | | 13.8 | |
|---|---|---|---|---|---|---|---|---|---|---|
| RPM | LPM | HP | LPM | HP | LPM | HP | LPM | HP | LPM | HP |
| 540 | 53.7 | 0.23 | 48.8 | 0.56 | 45 | 1.1 | 42.4 | 1.64 | 39 | 2.22 |
| 600 | 57.9 | 0.28 | 53 | 0.62 | 49.2 | 1.2 | 46.6 | 1.8 | 43.9 | 2.44 |
| 800 | 83.6 | 0.37 | 78.3 | 0.86 | 73.8 | 1.66 | 70.4 | 2.4 | 67.4 | 3.26 |

## Series 7560

| PSI | 0 | | 50 | | 100 | | 150 | | 200 | | 250 | | 300 | |
|---|---|---|---|---|---|---|---|---|---|---|---|---|---|---|
| RPM | GPM | HP | GPM | HP | GPM | HP | GPM | HP | GPM | HP | GPM | HP | GPM | HP |
| 540 | 12 | .33 | 11.1 | .74 | 10.3 | 1.25 | 9.5 | 1.77 | 8.6 | 2.26 | 7.8 | 2.78 | 7.1 | 3.3 |
| 800 | 18.3 | .89 | 17.5 | 1.26 | 16.9 | 1.95 | 16.1 | 2.65 | 15.5 | 3.4 | 14.5 | 4.2 | 13.7 | 4.9 |
| 1000 | 22.5 | 1.56 | 22 | 1.78 | 21.3 | 2.53 | 20.6 | 3.5 | 20 | 4.2 | 18.9 | 5.3 | 18.0 | 6.1 |

| BAR | 0 | | 3.4 | | 6.9 | | 10.3 | | 13.8 | | 17.2 | | 20.7 | |
|---|---|---|---|---|---|---|---|---|---|---|---|---|---|---|
| RPM | LPM | HP | LPM | HP | LPM | HP | LPM | HP | LPM | HP | LPM | HP | LPM | HP |
| 540 | 45.4 | 0.33 | 42 | 0.74 | 39 | 1.25 | 36 | 1.77 | 32.5 | 2.26 | 29.5 | 2.78 | 26.9 | 3.3 |
| 800 | 69.3 | 0.89 | 66.2 | 1.26 | 64 | 1.95 | 60.9 | 2.65 | 58.7 | 3.4 | 54.9 | 4.2 | 51.9 | 4.9 |
| 1000 | 85.2 | 1.56 | 83.3 | 1.78 | 80.6 | 2.53 | 78 | 3.5 | 75.7 | 4.2 | 71.5 | 5.3 | 68.1 | 6.1 |

## Series 1700

| PSI | 0 | | 50 | | 100 | | 150 | | 200 | |
|---|---|---|---|---|---|---|---|---|---|---|
| RPM | GPM | HP | GPM | HP | GPM | HP | GPM | HP | GPM | HP |
| 540 | 25.0 | .27 | 21.0 | 1.18 | 19.0 | 2.13 | 17.0 | 2.89 | 15.0 | 3.85 |
| 600 | 28.0 | .34 | 24.5 | 1.39 | 22.0 | 2.36 | 20.0 | 3.34 | 18.0 | 4.39 |
| 1000 | 45.0 | 1.42 | 43.0 | 3.0 | 41.0 | 4.67 | 39.0 | 6.07 | - | - |

| BAR | 0 | | 3.4 | | 6.9 | | 10.3 | | 13.8 | |
|---|---|---|---|---|---|---|---|---|---|---|
| RPM | LPM | HP | LPM | HP | LPM | HP | LPM | HP | LPM | HP |
| 540 | 94.6 | 0.27 | 79.5 | 1.18 | 71.9 | 2.13 | 64.3 | 2.89 | 56.8 | 3.85 |
| 600 | 106 | 0.34 | 92.7 | 1.39 | 83.3 | 2.36 | 75.7 | 3.34 | 68.1 | 4.39 |
| 1000 | 170 | 1.42 | 163 | 3.00 | 155 | 4.67 | 148 | 6.07 | - | - |

## Series 1500

| PSI | 0 | | 25 | | 50 | | 100 | | 150 | |
|---|---|---|---|---|---|---|---|---|---|---|
| RPM | GPM | HP | GPM | HP | GPM | HP | GPM | HP | GPM | HP |
| 540 | 33.1 | .51 | 29.7 | 1.02 | 27.8 | 1.45 | 24.3 | 2.46 | 21.0 | 3.54 |
| 600 | 36.8 | .66 | 33.6 | 1.15 | 31.7 | 1.68 | 28.3 | 2.78 | 25.0 | 3.95 |
| 1000 | 62.1 | 2.02 | 58.5 | 3.04 | 56.9 | 3.69 | 53.9 | 5.31 | 50.9 | 7.12 |

| BAR | 0 | | 1.7 | | 3.4 | | 6.9 | | 10.3 | |
|---|---|---|---|---|---|---|---|---|---|---|
| RPM | LPM | HP | LPM | HP | LPM | HP | LPM | HP | LPM | HP |
| 540 | 125 | 0.51 | 112 | 1.02 | 105 | 1.45 | 92 | 2.48 | 79.5 | 3.54 |
| 600 | 139 | 0.66 | 127 | 1.15 | 120 | 1.68 | 107 | 2.78 | 94.6 | 3.95 |
| 1000 | 235 | 2.02 | 221 | 3.04 | 215 | 3.69 | 204 | 5.31 | 193 | 7.12 |

Note: "HP" is electrical horsepower. Consult your gas engine supplier for engine horsepower required.

# List of Dimensions — Hypro Adapters

## PTO Adapters
## (Female to Female)

| Part Number | PTO (I.D.) | Pump End (I.D.) | Material | RPM | Pump Model |
|---|---|---|---|---|---|
| 1320-0015 | 3/4" | 5/8" | steel | * | 4000, 6500 |
| 1320-0016 | 5/8" | 5/8" | steel | * | 4000, 6500 |
| 1320-0022 | $1^3/_8$" (6 spline) | 5/8" | die cast | 540 | 6500 |
| 1320-0033 | $1^3/_8$" (6 spline) | 15/16" | die cast | 540 | 1500, 1700, 7560, 7700 |
| 1320-0038 | $1^3/_8$" (21 spline) | 15/16" | die cast | 1000 | 1500, 1700, 7560 |
| 1320-0053 | $1^3/_8$" (21 spline) | 5/8" | die cast | 1000 | 4000, 6500 |
| 1320-0054 | 3/4" | 15/16" | die cast | * | 1500, 1700, 7560,7700 |
| 1320-0059 | $1^3/_8$" (6 spline) | 1" | die cast | 540 | 5200 |
| 1320-0076 | $1^3/_8$" (6 spline) | 15/16" | forged steel | 540 | 1500, 1700, 7560, 7700 |
| 1320-0077 | $1^3/_8$" (6 spline) | 5/8" | forged steel | 540 | 6500 |
| 1320-0078 | $1^3/_8$" (21 spline) | 15/16" | forged steel | 1000 | 1500, 1700, 7560 |
| 1320-0079 | $1^3/_8$" (21 spline) | 5/8" | forged steel | 1000 | 4000, 6500 |
| 1320-0080 | $1^3/_4$" (20 spline) | 15/16" | forged steel | 1000 | 1500, 1700, 7560 |
| 1320-0081 | $1^3/_8$" (6 spline) | 1" | forged steel | 540 | 5200 |

* Refer to the recommended pump rpm.

## Quick Couplers
## (Female to Female)

| Part Number | PTO (I.D.) | Pump End (I.D.) | Material | RPM | Pump Model |
|---|---|---|---|---|---|
| 1321-0006 | $1^3/_8$" (6 spline) | 5/8" | die cast | 540 | 6500 |
| 1321-0007 | $1^3/_8$" (6 spline) | 15/16" | die cast | 540 | 1500, 1700, 7560, 7700 |
| 1321-0008 | $1^3/_8$" (21 spline) | 5/8" | die cast | 1000 | 4000, 6500 |
| 1321-0009 | $1^3/_8$" (21 spline) | 15/16" | die cast | 1000 | 1500, 1700, 7560 |
| 1321-0012 | $1^3/_8$" (multi-speed) | 5/8" | die cast | 540/1000 | 4000, 6500 |
| 1321-0013 | $1^3/_8$" (multi-speed) | 15/16" | die cast | 540/1000 | 1500, 7560, 7700 |
| 1323-0072 | $1^3/_8$" (6 spline) | 15/16" | forged steel | 540 | 1500,1700, 7560, 7700 |
| 1323-0073 | $1^3/_8$" (21 spline) | 15/16" | forged steel | 1000 | 1500, 1700, 7560 |
| 1323-0074 | $1^3/_8$" (6 spline) | 5/8" | forged steel | 540 | 6500 |
| 1323-0075 | $1^3/_8$" (21 spline) | 5/8" | forged steel | 1000 | 4000, 6500 |
| 1323-0076 | $1^3/_8$" (multi-speed) | 15/16" | forged steel | 540/1000 | 1500, 1700, 7560 |
| 1323-0077 | $1^3/_8$" (multi-speed) | 5/8" | forged steel | 540/1000 | 4000, 6500 |

# WHAT HYPRO®

## *Roller Pump, Rollers and Seals*

# SHOULD YOU USE?

Material options for rollers and seals are listed in the order of recommendations for usage. These recommendations are only a general guide. For suggestions on specific chemicals or applications, call Hypro's Technical/Applications Department at (800) 445-8360.

| Application | Specific Chemicals | Suggested Pump, Rollers and Seals |
|---|---|---|
| WEED CONTROL CHEMICALS | Emulsions, soluble powders, sodium arsenate | Use a SilverCast™, Ni-Resist, or cast iron pump; Super Rollers and Viton seals.<br><br>*NOTE: For weed control chemicals containing glyphosate (such as Roundup®) or other acidics, use only a SilverCast pump with Super or polypropylene rollers and Viton seals. Teflon rollers may be used up to 100 psi.* |
| INSECT CONTROL | Emulsions, not containing aromatic solvents | |
| BRUSH CONTROL | Heavy-duty sprays using diesel oil for carrier | Use a SilverCast, Ni-Resist or cast iron pump; Super Rollers and Viton seals. |
| PEST CONTROL CHEMICALS, FUMIGANTS, ETC. | This category or use includes mosquito sprays, termite control liquids, nematocides, soil and grain fumigants, where any of the following chemicals with aromatic solvents are present:<br><br>Pentachlorophenol, xylene, xylol, benzene, high sulphur fuel or diesel oil. Fumigants containing: ethylene dichloride, ethylene dibromide, carbon tetrachloride, perchlorethylene, trighlorethylene, methyl bromide, and other aromatic solvents. | |
| LIQUID FERTILIZERS | Up to 32% nitrogen content, or others if the liquid is at atmospheric pressure and the temperature is handled. | Use a SilverCast or Ni-Resist pump with polypropylene rollers and Buna-N seals. |
| POWDERED FERTILIZERS | Fertilizers dissolved in water (greenhouse plant food) | Use a SilverCast, Ni-Resist or cast iron pump; Super or polypropylene rollers; and Buna-N or Viton seals. |
| PUMPING | Large quantities of plain water | |
| SPRAYING | Wettable powder sprays | |
| MATERIAL HANDLING | Heavy abrasive powders in suspension | |
| ACIDS | Mild sulfuric acid for spraying; mild muriatic acid, inhibited muriatic, etc. | Use a SilverCast pump, Viton seals, and polypropylene or Teflon rollers.<br><br>*NOTE: Limit pressure to 100 psi when using Teflon rollers.* |

# Limited Warranty on Hypro/SHURflo Agricultural Pumps & Accessories

Hypro/SHURflo (hereafter, "Hypro") agricultural products are warranted to be free of defects in material and workmanship under normal use for the time periods listed below, with proof of purchase.

- Pumps: one (1) year from the date of manufacture, or one (1) year of use. This limited warranty will not exceed two (2) years, in any event.
- Accessories: ninety (90) days of use.

This limited warranty will not apply to products that were improperly installed, misapplied, damaged, altered, or incompatible with fluids or components not manufactured by Hypro. All warranty considerations are governed by Hypro's written return policy.

Hypro's obligation under this limited warranty policy is limited to the repair or replacement of the product. All returns will be tested per Hypro's factory criteria. Products found not defective (under the terms of this limited warranty) are subject to charges paid by the returnee for the testing and packaging of "tested good" non-warranty returns.

No credit or labor allowances will be given for products returned as defective. Warranty replacement will be shipped on a freight allowed basis. Hypro reserves the right to choose the method of transportation.

This limited warranty is in lieu of all other warranties, expressed or implied, and no other person is authorized to give any other warranty or assume obligation or liability on Hypro's behalf. Hypro shall not be liable for any labor, damage or other expense, nor shall Hypro be liable for any indirect, incidental or consequential damages of any kind incurred by the reason of the use or sale of any defective product. This limited warranty covers agricultural products distributed within the United States of America. Other world market areas should consult with the actual distributor for any deviation from this document.

## Return Procedures

All products must be flushed of any chemical (ref. OSHA section 1910.1200 (d) (e) (f) (g) (h)) and hazardous chemicals must be labeled/tagged before being shipped* to Hypro for service or warranty consideration. Hypro reserves the right to request a Material Safety Data Sheet from the returnee for any pump/product it deems necessary. Hypro reserves the right to "disposition as scrap" products returned which contain unknown fluids. Hypro reserves the right to charge the returnee for any and all costs incurred for chemical testing, and proper disposal of components containing unknown fluids. Hypro requests this in order to protect the environment and personnel from the hazards of handling unknown fluids.

Be prepared to give Hypro full details of the problem, including the model number, date of purchase, and from whom you purchased your product. Hypro may request additional information, and may require a sketch to illustrate the problem.

**Contact Hypro Service Department at 800-468-3428 to receive a Return Merchandise Authorization number (RMA#).** Returns are to be shipped with the RMA number clearly marked on the outside of the package. Hypro shall not be liable for freight damage incurred during shipping. Please package all returns carefully. All products returned for warranty work should be sent **shipping charges prepaid** to:

HYPRO
Attention: Service Department
375 Fifth Avenue NW
New Brighton, MN 55112

For technical or application assistance, call the **Hypro Technical/Application number: 800-445-8360**, or send an email to: **technical@hypropumps.com**. To obtain service or warranty assistance, call the **Hypro Service and Warranty number**: **800-468-3428**; or send a fax to the **Hypro Service and Warranty FAX**: **651-766-6618**.

*Carriers, including U.S.P.S., airlines, UPS, ground freight, etc., require specific identification of any hazardous material being shipped. Failure to do so may result in a substantial fine and/or prison term. Check with your shipping company for specific instructions.

Pentair
SPRAY & INJECTION TECHNOLOGIES GROUP
375 Fifth Avenue NW • New Brighton, MN 55112
Phone: (651) 766-6300 • 800-424-9776 • Fax: 800-323-6496
www.hypropumps.com

Printed in the USA
2011 Hypro